PROCESS DESIGN AND CONTROL

Rigorous Procedure for the Design of Conventional Atmospheric Crude Fractionation Units. Part I: Targeting

Miguel Bagajewicz* and Shuncheng Ji

School of Chemical Engineering and Material Science, University of Oklahoma, 100 East Boyd Street, T-335, Norman, Oklahoma 73019

The problem of designing crude fractionation units is not only a distillation design. It has the added complexity that these units should be able to process different types of crude, sometimes from heavy to light. Important heat exchange also takes place, and the energy efficiency is related to the column design parameters. Part I of this two-part series presents a rigorous targeting methodology to design this multipurpose plant, which can be implemented using a commercial simulator. Part II deals with the heat exchanger network design.

Introduction

Crude distillation is energy intensive. It consumes fuel at the equivalent of 2% of the crude processed. The conventional design (Figure 1), consisting of a column with side strippers and pump-around circuits, appeared 70 years ago[1] and is still the design used in the refining industry. Watkins[2] proposed a design procedure for this system and discussed a few variants such as pump-back reflux and stripping using reboilers. A few alternative designs can be found in the literature. For example, the addition of prefractionation columns to this conventional design was proposed by Brugma[3] and is being used in several industrial sites. Another old design, the carrier design, was proposed as early as the 1920s. This design makes use of light components to enhance the separation in the stripping section of the column. Nelson[4] also mentioned some other alternative designs. All of these old designs have been abandoned for reasons that are not completely known or understood. One important fact is that they were abandoned before the 1970s, when energy consumption started to play an important role in process economics. Because energy efficiency is now desired, all of these designs merit reevaluations. Nevertheless, the conventional design is widespread and popular.

Crude is mixed with water and heated in a heat exchanger network before entering a desalter, where most of the water containing the salt is removed. The desalted crude enters another heat exchanger network and receives heat from hot streams. Both heat exchanger networks make use of the vapors of the main column condenser, the pump-around circuit streams, and the products that need to be cooled. The preheated crude then enters the furnace, where it is heated to about 340−370 °C. The partially vaporized crude is fed into the flash zone of the atmospheric column, where the vapor and liquid separate. The vapor includes all of the components that comprise the products, while the liquid is the residue with a small amount of relatively light components in the range of gas oil. These components are removed from the residue by steam stripping at the bottom of the column. In addition to the overhead condenser, there are several pump-around circuits along the column, where liquid streams are withdrawn, cooled, and sent back to upper trays. Products are withdrawn in the liquid state from different trays and then stripped by steam in side strippers to remove light components. Bagajewicz[5] offered a detailed discussion of the effect of the different variables on the energy efficiency of this conventional design.

Crude oil is a complex mixture. There exist about 1000 distinguishable components with boiling temperatures varying from room temperature to over 550 °C. Crude distillation yields mixtures called naphtha, kerosene, diesel, and gas oil. These products are specified by ASTM D86 distillation temperatures.

Compared to common distillation of discrete components, crude distillation has the following specific features. (1) Large processing quantity: The charge rate is the largest among all petroleum or chemical processing units. The typical processing capability is around 15 000 m^3 per day (100 000 bbl/day). In such a large-scale process, energy cost accounts for a larger part of manufacturing costs than in other processes. (2) Large temperature variation throughout the column: The temperature difference between the top tray and the flash zone is about 250 °C, which means significant heat degradation throughout the column. (3) Absence of a reboiler: The main column functions as a rectifying section for products, while side columns act as stripping sections. (4) Low separation sharpness: Product quality is specified by ASTM boiling points rather than component fractions as in the discrete component separation case. The former is a more relaxed requirement. (5) Components in a lighter product can be found in any of heavier products: This is because all components constituting the light product have to travel through trays where heavier products are withdrawn.

The major objective in the design of crude distillation units is to find the most energy-efficient separation structure. Although some ideas exist for the design of

* To whom correspondence should be addressed.

10.1021/ie000302+ CCC: $20.00
Published on Web 12/16/2000

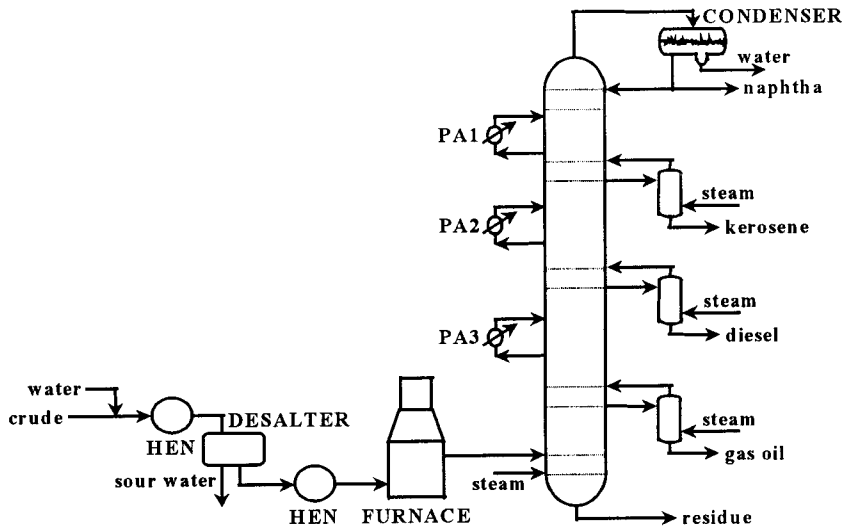

Figure 1. Conventional crude distillation.

energy-integrated distillation schemes,[6] they are not directly applicable to crude fractionation for the following reasons: (1) The number of components in the crude is too large to handle. Usually around 30−40 pseudo components are used, while available studies on sequencing seldom addressed systems containing over 5 components. (2) Previous separation sequencing studies assumed that the products were pure; however, products in crude distillation are mixtures.

Packie[7] pioneered the field of crude fractionation design. In his method, 5−95 gaps and 50% distillation temperature differences are used as separation criteria. The term gap refers to the difference between the 5% ASTM D86 distillation temperature of a heavier product and the 95% ASTM D86 distillation temperature of an adjacent lighter product. When the distillation curves of the two products overlap, a negative gap appears. Packie used empirical charts to express the relation among the 5−95 gap, the reflux ratio, and the number of trays in the section under consideration. However, the empirical nature of these charts results in inaccuracy and prevents optimal designs. Furthermore, in his design procedure, Packie considered the column design and the heat integration separately. The heat integration does not start until the column design is finished.

Watkins[2] pointed out that "optimizing the crude preheat-tower cooling heat-exchange train is the heart of crude unit design, and each case must be studied on an individual basis in order to arrive at the most economical processing scheme." However, Watkins did not present a specific methodology to perform this design.

Liebmann et al.[8,9] recently proposed an integrated design procedure. The design procedure starts with a sequence of simple columns that are generated by decomposing the crude main tower. The total number of trays is assumed to be the same as that in Watkins' design, and the number of trays for each column is calculated with the assumption that the R/R_{min} values are approximately the same for all columns. There is no thermal coupling between these initial columns. Next, reboilers and thermal coupling are introduced in order to reduce utility consumption. The grand composite curve is used to assess the proposed modifications. After all of the possible design modifications have been explored, these columns are merged into a single complex column.

The major advantage of the procedure presented by Liebmann et al.[9] is that it couples the column performance with heat recovery goals. However, the procedure is not able to assess the trade-off between steam injection and distribution of heat removal in pump-around circuits. Finally, addressing the column as a whole, which is the alternative we present in this paper, is more convenient and straightforward. It does not rely on any special rules of thumb for reflux ratios, and it helps determine better the relationships with column variables and heat integration.

Sharma et al.[10] proposed a method for calculating the maximum pump-around heat removal. First, a practical minimum reflux ratio for each column section is determined using Packie's empirical diagram. Then, the heat removal in the upper part of the column is calculated using a heat balance. The upper part may start from an arbitrary tray and end with the condenser. Next, the upper part is extended tray by tray, and heat surplus is calculated for each tray. The resultant heat surplus data are used to construct a column grand composite curve. Finally, the maximum heat removal for each section is determined using the column grand composite curve. A major advantage of this method is that the maximum heat removal can be estimated quickly without the need of simulation. However, as Packie's diagram is empirical and the effect of the stripping steam is not included, the heat removal calculated is not accurate. In contrast, the procedure presented in this paper is based on rigorous simulations and can capture the relationships between the column variables and the heat integration opportunities.

In this paper we present a new procedure for crude distillation design. The major features of this procedure are the following: (1) The design objective is to process several crudes at optimal conditions. (2) The design calculations are rigorous. (3) Heat demand−supply diagrams are used as a tool guiding the design. The major advantage of the heat demand−supply diagram is that the contribution of each process stream or pump-around to the total utility consumption is shown explicitly. This feature helps determine necessary changes leading to lower energy consumption. (4) The interaction between steam stripping and pump-around duties is

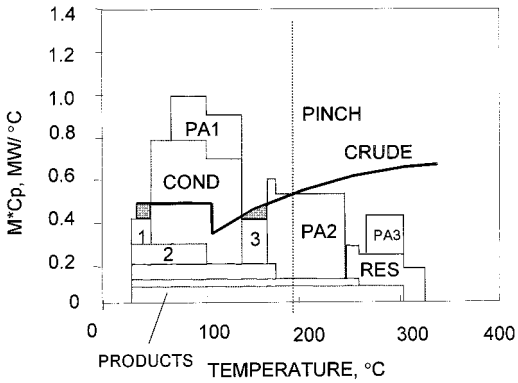

Figure 2. Heat demand−supply diagram of a crude distillation unit.

taken into consideration. (5) The starting point of the column design is a complex column without pump-around circuits.

Although general procedures that would render globally optimal solutions are a desirable goal, there is also interest in determining the optimal parameters for the subset of conventional units. This choice is made because practitioners are not always willing to make radical departures from this design. In addition, the knowledge of such optimal designs provides a useful horizon for retrofit procedures. In addition, the heat exchanger network design procedure presented in Part II renders a structure suitable for the processing of different crudes at maximum energy efficiency. A short version of this procedure was presented by Bagajewicz et al.[11]

The paper is organized as follows: The heat demand−supply diagram, an important tool, is presented first, and the roles of the different column design variables in this diagram are discussed. Next, limitations in the pump-around circuit heat load are described. Finally, the design targeting procedure is presented. This rigorous procedure is based on the use of commercial simulators, departing from the use of charts, rules of thumb, and other approximations.

Heat Demand−Supply Diagram

Heat demand−supply diagrams are an extension of the concept of temperature−enthalpy diagrams.[12−17] In the demand−supply diagram, a stream is represented by a curve. This curve represents the product of mass flow rate and specific heat capacity (true or apparent in the case of phase changing streams) as a function of temperature. A schematic heat demand−supply diagram for typical crude fractionation units, like the one of Figure 1, is shown in Figure 2.

In setting up the diagram, a heat demand line is first drawn and used as a background. The crude is the only cold stream. In some cases, as proposed by Liebmann et al.,[9] water at room temperature to produce steam is also considered a cold stream. However, in many refineries, low-pressure steam is in surplus, and it can be considered as a cheap or even free heat source. To locate the hot streams (heat supply), the usual minimum temperature difference is used. Thus, the temperatures of hot streams are shifted to the left by this minimum difference, which has been traditionally named the heat recovery minimum approximation temperature (HRAT). The area below the heat demand line represents the total heat demand of the unit without heat recovery.

In Figure 2, we see two different regions, those where heat supplies are larger than demands and those where heat supplies are smaller than demands. When the supply exceeds the demand, one can move the surplus part of the supply to a lower-temperature region where the supply is deficient. Figure 2 shows two areas where the supply is in deficit (gray areas). The left gray area can be covered by the heat surplus from the condenser or from PA1. The right one can be covered using the excess of PA2. This illustration is omitted throughout the paper, assuming that this area matching is implicit.

The location of the pinch point can be easily obtained from this diagram. It is the lowest temperature at which the demand is larger than the supply after the shifting and area matching has been performed. Finally, the heating utility is given by the unmatched demand on the right, and the cooling utility is given by the extra supply on the left.

Three options to reduce energy consumption exist: decreasing demand, increasing supply, and improving the match between the supply and the demand. (1) Decrease of demand. A decrease in heat demand can be realized by moving the demand line down, that is, decreasing the flow rate. One way of doing this is to flash the crude at lower temperatures and send the vapor to a tray above the flash zone. In practice, vaporization before the furnace inlet is pressure suppressed to avoid two-phase flow. This reduces energy saving opportunities. Such opportunity is analyzed in a separate work.[18] Another way to decrease heat demand is to reduce the target temperature of the crude. This can be achieved by lowering the pressure drop from the outlet of the furnace to the overhead reflux drum of the column. In this sense, a vacuum operation is even better, but it is excluded for other reasons (mainly cost). Another way of decreasing the final temperature is using a larger amount of steam, but the introduction of steam has complicating effects on energy consumption, which will be discussed in another paper. (2) Increase of the supply and/or the thermal quality. Withdrawing certain products in the vapor phase instead of in a liquid phase has the advantage that condensation heat is released at a higher temperature. This option is not explored in this paper, mainly because it is a major departure from the conventional scheme. (3) Improvement of match between demand and supply. Assume that there is a large heat surplus in a moderate-temperature range and a heat deficit in a higher-temperature range. One way to improve this mismatch is to move a part of the heat surplus to a higher temperature by increasing the duties of the pump-around circuits. The design procedure proposed in this paper relies on the idea of distributing heat among the condenser and pump-around circuits. We focus on this procedure next.

Pump-Around Circuits and Heat Recovery

The original purpose of adding pump-around circuits was to reduce vapor and liquid traffic at the top section of the column[2]. Without pump-around circuits, all condensation heat has to be removed from the condenser, which results in a large vapor flow rate at the top trays. We explore now the limit of heat that could be removed from a pump-around circuit.

Maximum Heat Duty of Pump-Around Circuits. In Figure 3, envelope III contains k pump-around circuits. To calculate the maximum pump-around duty,

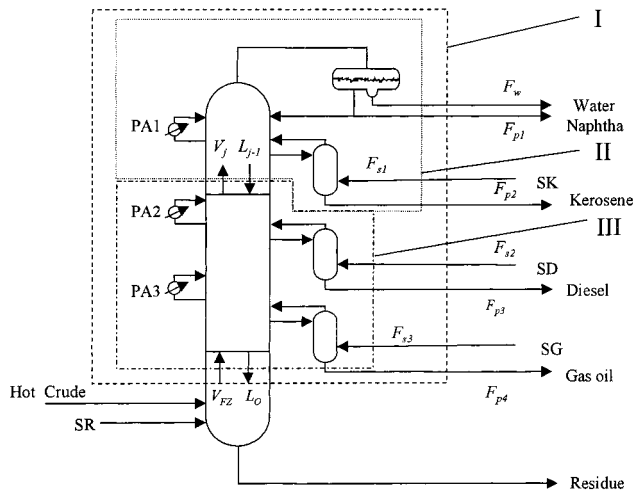

Figure 3. Heat balance of the distillation column.

we carry out a heat balance for this envelope.

$$V_{\mathrm{FZ}}^{\mathrm{W}} h_{\mathrm{FZ}}^{\mathrm{W}} + V_{\mathrm{FZ}}^{\mathrm{O}} h_{\mathrm{FZ}}^{\mathrm{O}} + L_{j-1} h_{L_{j-1}} + \sum_{i \in \mathrm{III}} F_{\mathrm{s}i} h_{\mathrm{s}i} + \sum_{k \in \mathrm{III}} Q_k = L_{\mathrm{O}} h_{L_{\mathrm{O}}} + \sum_{i \in \mathrm{III}} F_{\mathrm{p}i} h_{\mathrm{p}i} + V_j^{\mathrm{W}} h_{V_j}^{\mathrm{W}} + V_j^{\mathrm{O}} h_{V_j}^{\mathrm{O}} \quad (1)$$

In eq 1, $V_{\mathrm{FZ}}^{\mathrm{W}}$ and $V_{\mathrm{FZ}}^{\mathrm{O}}$ are the steam flow rate at the flash zone and the hydrocarbon vapor flow rate at the flash zone, respectively and V_j^{W} and V_j^{O} are the steam flow rate at tray j and the hydrocarbon vapor flow rate at tray j, respectively. Note that $V_{\mathrm{FZ}} = V_{\mathrm{FZ}}^{\mathrm{W}} + V_{\mathrm{FZ}}^{\mathrm{O}}$ and $V_j = V_j^{\mathrm{W}} + V_j^{\mathrm{O}}$. It is assumed that water is insoluble in liquid streams.

By applying material balance of hydrocarbons to envelope I, one obtains

$$V_{\mathrm{FZ}}^{\mathrm{O}} = L_{\mathrm{O}} + \sum_{i \in \mathrm{I}} F_{\mathrm{p}i} \quad (2)$$

Similarly, material balances for envelopes II and III are

$$V_j^{\mathrm{O}} = L_{j-1} + \sum_{i \in \mathrm{II}} F_{\mathrm{p}i}$$

$$V_j^{\mathrm{W}} = V_{\mathrm{FZ}}^{\mathrm{W}} + \sum_{i \in \mathrm{III}} F_{\mathrm{s}i} \quad (3)$$

Replacing $V_{\mathrm{FZ}}^{\mathrm{O}}$, V_j^{W}, and V_j^{O} in eq 1, one obtains

$$\sum_{k \in \mathrm{III}} Q_k = L_{\mathrm{O}}(h_{L_{\mathrm{O}}} - h_{\mathrm{FZ}}^{\mathrm{O}}) + \sum_{i \in \mathrm{III}} F_{\mathrm{p}i}(h_{\mathrm{p}i} - h_{\mathrm{FZ}}^{\mathrm{O}}) + \sum_{i \in \mathrm{II}} F_{\mathrm{p}i}(h_{V_j}^{\mathrm{O}} - h_{\mathrm{FZ}}^{\mathrm{O}}) + V_{\mathrm{FZ}}^{\mathrm{W}}(h_{V_j}^{\mathrm{W}} - h_{\mathrm{FZ}}^{\mathrm{W}}) + \sum_{i \in \mathrm{III}} F_{\mathrm{s}i}(h_{V_j}^{\mathrm{W}} - h_{\mathrm{s}i}) + L_{j-1}(h_{V_j}^{\mathrm{O}} - h_{L_{j-1}}) \quad (4)$$

There are six terms on the right-hand side of eq 4. The first through the fifth terms represent the condensation heat of the overflash stream L_{O}, the condensation heat of the products leaving envelope III, the apparent heat released by the hydrocarbon vapor V_j^{O}, and the apparent heat released by the steam streams. The last term stands for the vaporization heat of the internal reflux L_{j-1}. Apparently, when L_{j-1} goes to zero, the heat removal from envelope III reaches its maximum. By including more pump-arounds in envelope III and applying eq 4 accordingly, one can find the maximum heat duty for each pump-around circuit.

It can be shown through an overall heat balance that the total amount of heat to be removed from the column depends on the yields of the products. In addition, shifting heat from envelope II to envelope III results in a decrease of L_{j-1}. Thus, the shifting can take place as long as L_{j-1} remains positive.

Effect of Heat Shifting on Separation. It is well-known that heat shifting reduces separation efficiency. The presence of the pump-around circuit decreases the number of effective ideal trays.[5] The effect can be even more detrimental to separation if the flow rate of a pump-around circuit is increased. As we shall see later, these effects can be compensated to a certain extent by increasing the steam rates in the side strippers. Another solution is to increase the number of trays. However, with the total number of trays kept constant, the aforementioned relationship between heat recovery and steam consumption can be incorporated into the design procedure.

Design Procedure

We now summarize the technique for designing a multipurpose energy-efficient atmospheric column. First, the Watkins design method is used to obtain an initial scheme without pump-around circuits. Then, a heat demand−supply diagram is constructed, and the direction of heat shifting needed for maximum energy efficiency is determined. This procedure is repeated for at least the lightest crude and the heaviest crude that will be processed. Thus, the design procedure is divided into two parts: the targeting procedure and the multipurpose heat exchanger network design. This paper focuses on the targeting procedure, which is presented next. After this, the goals of the heat exchanger network design procedure are outlined. The heat exchanger network design procedure is presented in Part II.

Step 1. Begin with the lightest crude to be processed. As the lightest crude has the highest yields of light distillates, the supply of heat is the largest. Next, the major design parameters (the number of trays in each section, the pressure drop, and the amount of stripping steam) are chosen using the guidelines offered by Watkins with one exception: No pump-around circuits are included at this point.

Step 2. The simulation is performed next. Usually, the column is not difficult to converge, as the liquid reflux ratio is large.

Step 3. The heat demand−supply diagram is constructed.

Step 4. The maximum amount of heat is transferred to a pump-around circuit located in the region between the top tray and the first product withdrawal tray. The location of the pump-around circuit withdrawal and the return temperature are conveniently chosen so that the energy recovery is maximized. This step is discussed further when presenting the example.

Step 5. If the product gap becomes smaller than required, the stripping steam flow rate is increased to fix the gap. As long as the steam added has a lower cost than the energy saved, one can continue shifting loads. Otherwise, it is advisable to stop when a trade-off has been reached.

Step 6. If there is heat surplus from the pump-around circuit just added, transfer the heat to the next pump-

Table 1. Feedstock Used for the Design

crude	density (kg/m^3)	throughput (m^3/h)
light crude	845 (36.0 API)	795
intermediate crude	889 (27.7 API)	795
heavy crude	934 (20.0 API)	795

Table 2. TBP Data

	temperature (°C)		
vol %	light crude	intermediate crude	heavy crude
5	45	94	133
10	82	131	237
30	186	265	344
50	281	380	482
70	382	506	640
90	552	670	N/A

Table 3. Light-End Composition of Crude

	vol %		
compound	light crude	intermediate crude	heavy crude
ethane	0.13	0.1	0
propane	0.78	0.3	0.04
isobutane	0.49	0.2	0.04
n-butane	1.36	0.7	0.11
isopentane	1.05	0	0.14
n-pentane	1.30	0	0.16
total	5.11	1.3	0.48

Table 4. Product Specifications and Withdrawal Tray

product	specification	withdrawal tray
naphtha	D86 (95% point) = 182 °C	1
kerosene	D86 (95% point) = 271 °C	9
diesel	D86 (95% point) = 327 °C	16
gas oil	D86 (95% point) = 377−410 °C	25
overflash rate	0.03	
kerosene−naphtha	(5−95) gap ≥ 16.7 °C	
diesel−kerosene	(5−95) gap ≥ 0 °C	
gas oil−diesel	(5−95) gap = −5.6 °C to −11 °C	
feed tray		29
total trays		34

around circuit between draws in the same way as in step 4. If not, stop.

At this stage, once this procedure is repeated for different crudes, one is left with heat removal targets from the condenser, the products, and several pump-around circuit streams. Typically, because the light crude is the one that needs a larger reflux, it exhibits a larger amount of pump-around circuit duties. After these targets are determined, it is shown that there is still some flexibility to move heat from one pump-around to another, a feature that may be helpful in the final design of the heat exchanger network or for retrofit. The above procedure is illustrated first. The results of this targeting procedure are used as motivating material for discussing the goals of the multipurpose heat exchanger network, which is presented in Part II.

Illustration

The properties of the light crude, intermediate crude, and heavy crude are shown in Tables 1−3. Table 4 indicates the specifications of the products. The product withdraw locations are determined according to Watkins' guidelines, and the results are shown in Table 5.

There are 34 trays in the main column and 4 trays in each stripper. The flow rates of stripping steam streams

Table 5. Tray Requirements in Watkins Design

separation	number of trays
light naphtha to heavy naphtha	6−8
heavy naphtha to light distillate	6−8
light distillate to heavy distillate	4−6
heavy distillate to gas oil	4−6
flash zone to first draw tray	3−4
steam stripping sections	4

Table 6. Comparative Results of No Pump-Around and One Pump-Around Schemes

product	no pump-around	one pump-around
naphtha flow rate	250 m^3/h	248 m^3/h
kerosene flow rate	144 m^3/h	146 m^3/h
diesel flow rate	70 m^3/h	70 m^3/h
gas oil flow rate	121 m^3/h	121 m^3/h
residue flow rate	211 m^3/h	211 m^3/h
kerosene stripping steam ratio[a]	9.82	9.68
diesel stripping steam ratio	10.22	10.27
gas oil stripping steam ratio	10.12	10.11
residue stripping steam ratio	10.19	10.19
kerosene-naphtha (5%−95%) gap	25.12 °C	23.0 °C
(5−95) diesel-kerosene gap	5.14 °C	5.31 °C
(5−95) gas oil- diesel gap	0.93 °C	0.91 °C
kerosene withdrawal temperature	238.8 °C	237.1 °C
diesel withdrawal temperature	298.7 °C	298.7 °C
gas oil withdrawal temperature	338.7 °C	338.7 °C
residue withdrawal temperature	347.8 °C	347.8 °C
condenser duty	103.86 MW	41.70 MW
condenser temperature range	155−43.3 °C	146.4−43.3 °C
pump-around 1 duty	−	62.14 MW
pump-around 1 temperature range	−	179.6−104.4 °C
flash zone temperature	358.6 °C	358.6 °C
energy consumption (E)	103.78 MW	96.77 MW

[a] Steam amount in lb/h over the amount of product in bbl/h.

are estimated and adjusted to 10 lb per barrel of product, as suggested by Watkins. The total energy consumption (E) is calculated using the following expression:

$$E = U + 0.7\sum H_i^s \tag{5}$$

where U is the minimum heating utility obtained using straight pinch analysis and $\sum H_i^s$ is the summation of energy flow of all steam streams. Because low-pressure steam is cheaper than fuel gas with the same amount of heat content, a weight factor of 0.7 is used for the steam. The total energy consumption is used as an objective function.

Simulation results for the initial scheme with no pump-around circuits are shown in Table 6. Note the product gaps are well above the specifications.

The heat demand−supply diagram corresponding to the solution in Table 6 is shown in Figure 4. There is a huge heat surplus in the condenser region, which results in a large cooling utility. Meanwhile, a large heat deficit exists above 155 °C. As the total heat supply is almost constant, the way toward energy savings is to change the heat supply profile. That is, instead of supplying all heat at a low temperature, some heat can be supplied at a higher temperature where the heat demand is larger than the heat supply. In other words, transfer some heat from the condenser to a pump-around circuit, as indicated by the arrow in Figure 4.

One Pump-Around Circuit. If a pump-around is above all of the side-withdrawal product lines, the heat that can be transferred from the condenser will be the

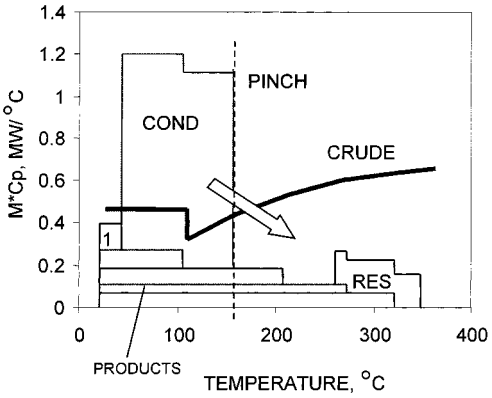

Figure 4. Heat demand−supply diagram for crude distillation without pump-around circuits.

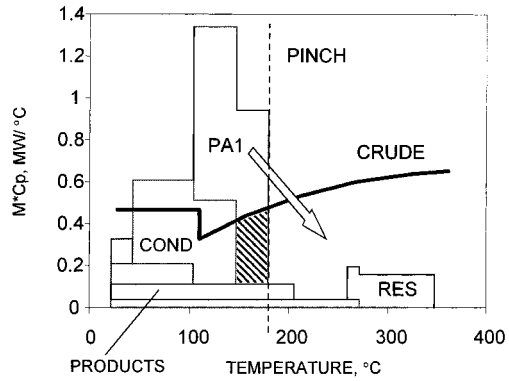

Figure 5. Heat demand−supply diagram for crude distillation with a top pump-around.

maximum. Therefore, the first pump-around has to be above the kerosene withdrawal tray. The question is the number of trays that one should put between the condenser and the top pump-around region. We recommend that the top pump-around region be adjacent to the condenser. No tray is put in between. This recommendation is based on the observation that the trays below a product withdraw line and above an adjacent pump-around circuit receive little reflux and barely contribute to separation. The pump-around stream is withdrawn from tray 4, cooled in the heat exchangers, and returned to tray 2. The return temperature is 104.4 °C, which is optimized after the duty is determined.

The duty of the top pump-around (PA1) is increased gradually, and product gaps are examined in each simulation. The kerosene−naphtha gap decreases with the increase in the PA1 duty but remains well above the specification, while the other gaps are almost unchanged. The heat shift continues without violating the gap specifications until the reflux ratio is around 0.1. Further heat shift would result in liquid drying up on the top tray. Thus, the limit of the heat shifting has been reached. The duty of 62 MW represents the total amount of heat one could obtain from all pump-around circuits. The following steps consist of distributing this amount of heat properly among several pump-around circuits. The main operation variables of the scheme with one pump-around are shown in Table 6.

The major conclusions are as follows: (1) The total energy consumption (E) decreases by 7 MW compared to the no pump-around scheme. (2) The kerosene−naphtha gap is reduced from 25 to 23 °C, remaining well above the specification of 16.7 °C. (3) The yield of naphtha decreases, and the yield of kerosene increases. This is because some light components of the vapor are absorbed by the cold pump-around stream and carried to the kerosene withdrawal tray. Note that the total yield of the two products remains constant. (4) Little change takes place below the kerosene withdrawal tray.

We now turn our attention to the resulting heat demand−supply diagram (Figure 5). The shaded area is the energy savings achieved by adding PA1. The heat surplus in the condenser region is greatly reduced, but it is still significant. However, it is impossible to shift more heat from the condenser to PA1.

The return temperature of PA1 is not important in terms of energy consumption, because the heat surplus is larger than the demand below the PA1 withdrawal temperature. To reduce the heat surplus in the region of PA1, a second pump-around is installed at the position indicated in Figure 5.

Table 7. Effect of Increasing PA2 Duty without Changing Steam Flow Rates

	1	2
duty of PA2	29.31 MW	33.71 MW
duty of PA1	32.83 MW	28.43 MW
duty of condenser	41.94 MW	42.03 MW
(5−95) kerosene−naphtha gap	18.49 °C	16.60 °C
(5−95) diesel−kerosene gap	1.63 °C	1.48 °C
(5−95) gas oil−diesel gap	1.22 °C	1.23 °C
energy consumption	70.59 MW	67.35 MW

Two Pump-Around Circuits. The second pump-around (PA2) is positioned between tray 10 and tray 12, just below the kerosene withdrawal tray. The return temperature is chosen to be approximately equal to the withdrawal temperature of PA1. A lower temperature would result in a heat surplus in the region of PA1, whereas a very high return temperature would not alter the energy savings but would result in heavier liquid traffic in the PA2 region. With the increase in the PA2 duty, the gap between kerosene and naphtha decreases quickly. Table 7 shows the change in the gaps as a function of the duty of pump-around PA2.

When the duty of PA2 is larger than 33.7 MW, the kerosene−naphtha gap does not satisfy the specification. To recover this gap, one could increase the stripping steam flow rate or increase the number of trays in the naphtha−kerosene section. The former option is used in this work, as the latter might not be sufficient or even practical on its own. The kerosene and diesel stripping steam flow rates are adjusted with a controller in which the gap specifications are defined.

With the help of the stripping steam, it is possible to move more heat from PA1 to PA2. The trade-off between increasing the energy recovery and spending more steam is evaluated using eq 5. Heat shifting continues until the liquid reflux at the kerosene withdrawal tray is small and/or the kerosene−naphtha gap cannot be recovered even with increased amounts of stripping steam. This is a limit imposed by the separation requirement. The limiting case is shown in Table 9 (first column) and should be compared with the second column of Table 6.

The major changes from one pump-around to two pump-around circuits are: (1) The net energy consumption decreases sharply by 32 MW. (2) The flow rate of the kerosene stripping steam is nearly doubled. The large amount of extra steam is used to strip a significant amount of light components in the kerosene withdrawal

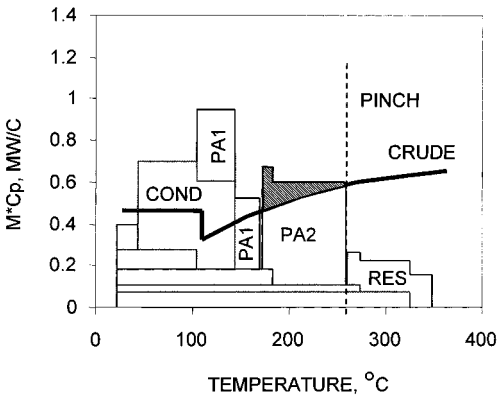

Figure 6. Heat demand−supply diagram for crude distillation with two pump-around circuits.

Table 8. Effect of the Duty of PA3 on Energy Consumption

PA3 duty (MW)	energy consumption (MW)
6.45	61.96
8.79	61.64
13.19	61.67
23.45	63.76
26.67	64.56

stream. The top section of the column becomes less hot because of the increased stripping steam. The kerosene withdrawal temperature drops by 33 °C. (3) The yield of diesel increases while the yield of naphtha decreases.

The heat demand−supply diagram (Figure 6) shows a good match, and the pinch temperature increases to the value of the PA2 withdrawal temperature. The heat surplus in the region of PA1 is still high, but further shifting would cost too much steam to be beneficial. Therefore, this remaining heat surplus is useless.

Now, the only heat surplus transferable is located in the PA2 circuit, shown as the shaded area in Figure 6. To make use of this heat surplus, it is necessary to add a third pump-around circuit.

Three Pump-Around Scheme. The third pump-around (PA3) is located between tray 17 and tray 19. The return temperature is 232 °C. Heat is shifted gradually from PA2 to PA3, with the gaps maintained by adjusting steam flow rates. The effect of the duty of PA3 on energy consumption is shown in Table 8. A summary of all of the variables is given in Table 9.

At the beginning, the energy consumption decreases with the increase in the duty of PA3. However, when the PA3 duty exceeds 8.8 MW, the energy consumption stays constant in a rather wide range (Table 8). This is because little heat surplus exists in the region of PA2. Therefore, more heat shifting makes no difference. Beyond this stable range, increased heat shifting to PA3 results in an increase in energy consumption because of the increased use of steam, which means that the cost of additional steam consumption outweighs the gain in energy recovery. Clearly, 8.8 MW is the right point at which to stop. This effect cannot be captured with other design procedures.

Figure 7 is the heat demand−supply diagram. The heat surplus previously in the region of PA2 (Figure 6) has been moved to the PA3, which accounts for the decrease in energy consumption.

It should be pointed out that the distribution of pump-around duty has a remarkable effect on the column temperature profile. Figure 8 shows stream temperature

Table 9. Comparative Results for Two and Three Pump-Around Circuits

product	two pump-around	three pump-around
naphtha flow rate	244 m^3/h	244 m^3/h
kerosene flow rate	145.6 m^3/h	145.5 m^3/h
diesel flow rate	73.6 m^3/h	72.5 m^3/h
gas oil flow rate	121.6 m^3/h	123.85 m^3/h
residue flow rate	210.5 m^3/h	209.7 m^3/h
kerosene stripping steam ratio[a]	19.02	18.04
diesel stripping steam ratio	8.11	12.54
gas oil stripping steam ratio	7.84	7.71
residue stripping steam ratio	10.20	10.24
(5−95) kerosene−naphtha gap	16.7 °C	16.7 °C
(5−95) diesel−kerosene gap	0 °C	0 °C
(5−95) gas oil−diesel gap	−2.0 °C	−2.9 °C
kerosene withdrawal temperature	202.2 °C	212.7 °C
diesel withdrawal temperature	291.2 °C	289.9 °C
gas oil withdrawal temperature	336.1 °C	338.9 °C
residue withdrawal temperature	347.9 °C	348.2 °C
condenser duty	42.4 MW	43.3 MW
condenser temperature range	143.6−43.3 °C	143.5−43.3 °C
pump-around 1 duty	22.3 MW	22.3 MW
pump-around 1temperature range	169.2−104.4 °C	169.4−104.4 °C
pump-around 2 duty	42.5 MW	33.7 MW
pump-around 2 temperature range	257.9−171.1 °C	255.3−171.1 °C
pump-around 3 duty	−	8.8 MW
pump-around 3 temperature range	−	310.6−232.2 °C
flash zone temperature	358.7 °C	359 °C
energy consumption	64.73 MW	61.64 MW

[a] Steam amount in lb/h over the amount of product in bbl/h.

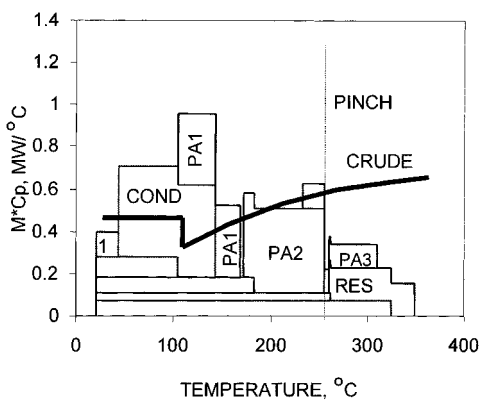

Figure 7. Heat demand−supply diagram for crude distillation with three pump-around circuits.

changes as a function of the duty of the third pump-around. With the increase in these duties, the temperatures of the products and the pump-around circuits decrease.

Finally, the effect of the pump-around return temperatures is briefly explored. As the pinch temperature is located in the region of PA2, its return temperature affects the energy consumption. Figure 9 shows this effect. In this figure, PA3 is not shown for simplicity. The dotted line is the new PA2 region with a higher return temperature, and the shaded areas are the changes incurred. When the PA2 duty is constant, a higher return temperature results in a lower withdrawal temperature. The total effect depends on the trade-off between these two effects or the area difference between the shaded triangle and the shaded rectangle. The trade-off is shown in Table 10. The optimal return temperature is found to be 177.8 °C.

At this point, we have reached the best scheme for the light crude. Next, we perform the same analysis for the heavy crude.

Heavy Crude. The total energy consumption and the pump-around duty distribution are shown in Table 11.

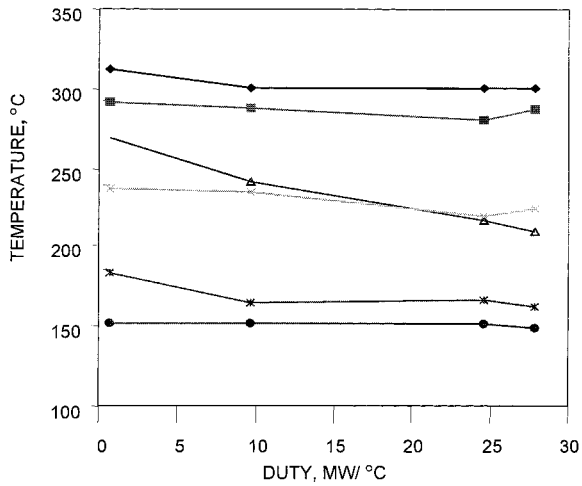

Figure 8. Pump-around withdrawal temperatures and product temperatures as a function of the duty of the third pump-around (light crude).

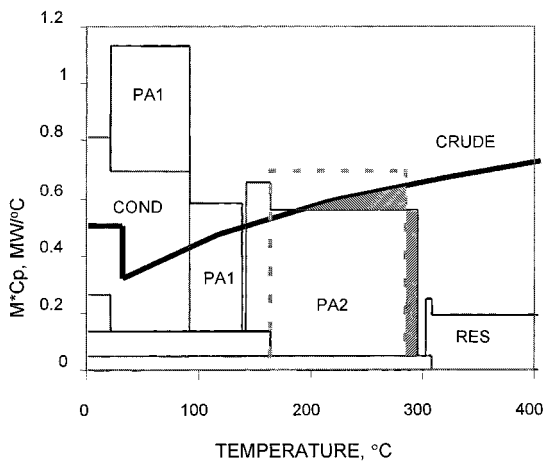

Figure 9. Effect of the return temperature of PA2 on energy consumption.

Table 10. Effect of the Return Temperature of PA2 on Energy Consumption

PA2 return temperature (°C)	withdrawal temperature (°C)	diesel stripping steam (MW)	energy consumption (MW)
171.1	255.3	2.15	61.64
177.8	254.4	2.17	60.91
193.3	251.9	2.25	61.96

Table 11. Effect of Pump-Around Duties on Energy Consumption[a]

PA1 duty (MW)	PA2 duty (MW)	PA3 duty (MW)	energy consumption (MW)
0	0	0	24.27
6.10	0	0	23.88
2.32	4.34	0	23.88
2.32	2.20	2.14	23.79

[a] Heavy crude, $\Delta T = 5.6$ °C.

The heat demand−supply diagram and the operation variables for a scheme with three pump-around circuits are shown in Figure 10 and Table 12. The following results are observed: (1) The energy consumption changes very little when heat is shifted from the condenser to the pump-around circuits, especially when heat is shifted from PA1 to PA2 or PA3. This is because there is no heat surplus in the condenser region (Figure 10). However, because the light crude and the medium

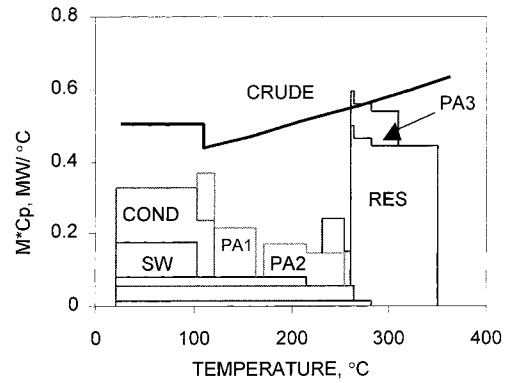

Figure 10. Heat demand−supply diagram for heavy crude distillation.

Table 12. Results for Heavy Crude

product	heavy crude
naphtha flow rate	55.37 m^3/h
kerosene flow rate	48.64 m^3/h
diesel flow rate	69.36 m^3/h
gas oil flow rate	29.37 m^3/h
residue flow rate	592.51 m^3/h
kerosene stripping steam ratio[a]	1.63
diesel stripping steam ratio	2.98
gas oil stripping steam ratio	37.9
residue stripping steam ratio	2.68
(5−95) kerosene-naphtha gap	26.07 °C
(5−95) diesel-kerosene gap	0.86 °C
(5−95) gas oil- diesel gap	−5.84 °C
kerosene withdrawal temperature	259.7 °C
diesel withdrawal temperature	317.4 °C
gas oil withdrawal temperature	344.4 °C
residue withdrawal temperature	366.7 °C
condenser duty	14.8 MW
condenser temperature range	123.3−18.5 °C
PA1 duty	20.8 MW
PA1 temperature range	175.7−104.4 °C
flash zone temperature	353.2 °C
energy consumption	81.49 MW

[a] Steam amount in lb/h over the amount of product in bbl/h.

Table 13. Effect of the HRAT on Energy Consumption (Light Crude)

HRAT (°C)	PA1 duty (MW)	PA2 duty (MW)	PA3 duty (MW)	energy consumption (MW)
5.6	22.3	34	8.8	61
22.2	22.3	29	8.8	69.8
44.4	22.3	23	13.2	81.2

crude require the PA2 and PA3 heat exchangers, shifting heat from PA1 to PA2 and PA3 in the heavy crude design might be necessary. (2) When heat is shifted to PA2 and PA3, more steam is needed for the diesel stripper to regain the kerosene−diesel gap. The diesel stripping steam flow rates for the designs with one, two, and three pump-around circuits are 32.5, 48.5, and 113.4 kg mol/h, respectively. Although the steam consumption increases, the total energy consumption is barely affected because the heat from the extra steam is utilized to cover the heat deficit in the condenser region. (3) The separation of kerosene and diesel in the column is much easier than that of the light crude. Before stripping, the gap between kerosene and naphtha is 17.2 °C, satisfying the separation requirement.

Effect of the Minimum Temperature Approach

The effect of the HRAT on the optimal pump-around duty distribution is shown in Tables 13−15. Note that, for the light crude, the PA3 duty increases with the

Table 14. Effect of the HRAT on Energy Consumption (Heavy Crude)

HRAT (°C)	PA1 duty (MW)	PA2 duty (MW)	PA3 duty (MW)	energy consumption (MW)
5.6	7.9	7.5	7.3	81.2
22.2	22.6	0	0	86.4
44.4	22.6	0	0	93.1

Table 15. Effect of the HRAT on Energy Consumption (Medium Crude)

HRAT (°C)	PA1 duty (MW)	PA2 duty (MW)	PA3 duty (MW)	energy consumption (MW)
5.6	15.2	26.4	0	63.1
22.2	15.2	26.4	0	70.4
44.4	15.2	26.4	0	79.9

increase in the HRAT. This can be explained using the heat demand−supply diagram (Figure 7). When the HRAT is 5.6 °C, there is almost no heat surplus in the region of PA2. However, when the HRAT is increased, the crude demand curve is moved to the right, and heat surplus appears again. Thus, the heat surplus needs to be reduced to achieve the maximum energy savings. The heavy crude behaves differently. As there is no heat surplus in the region of the condenser and PA1, shifting heat from PA1 to PA2 or PA3 does not reduce the net heat demand but does require more stripping steam to keep the product gaps. At low HRATs (e.g., 5.6 °C), most of the heat coming from the condenser can be used because of the heat deficit in the condenser region. However, when the HRAT is raised, the overlap between the crude curve and the condenser curve reduces, and part of the heat from the condenser is at a temperature that is too low to be used. In such a case, the heat from the increased steam cannot be used. Therefore, heat shifting to the lower pump-around circuits is not beneficial.

These calculations were also performed for the intermediate crude (Table 15). In this case, the heat distribution does not change with the HRAT. This is because there is always a heat surplus in the region of PA1 and a heat deficit in the region of PA2. The heat surplus in the region of PA1 prompts maximum heat shift to PA2, while the heat deficit in PA2 excludes the need for shifting heat to PA3. Thus, the optimal solution is to maximize the duty of PA2.

Flexibility

The basis of this design procedure is the transferring of heat duty from the condenser to the lower pump-around circuits. In doing so, limits to this transfer are encountered. In addition, heat surplus can be transferred back. For example, the heat surplus observed in the pump-around PA1 for the light crude (Figure 7) could, in principle, be transferred back to the condenser without affecting the utility consumption. Such flexibility is further discussed in Part II.

Reboilers

Reboilers are rarely used in conventional crude distillation because their installation is expensive and sometimes they are less efficient than steam stripping. However, Liebmann et al. [9] suggested that the use of reboilers could lead to energy savings. This conclusion is made by analyzing a scenario in which water to produce steam is considered as another cold stream. We now revisit this analysis.

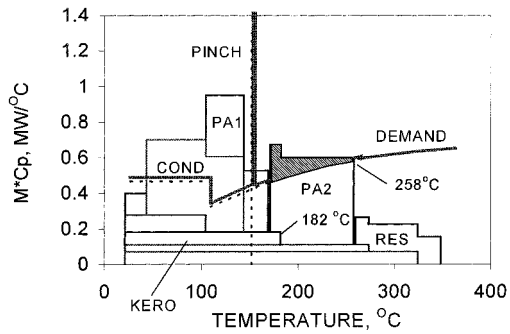

Figure 11. Heat demand−supply diagram for light crude including steam as cold stream.

If one assumes that steam is another heat sink, then the location of the pinch changes. Figure 11 shows the demand−supply diagram of the light crude. The heavy solid curve represents the heat demand for both the crude and the steam. The heat demand for the crude is shown as a broken curve for comparison. In this figure, a heat surplus can be observed in the PA2 region. To utilize the heat surplus, there are three options: shift the heat to the third pump-around, produce low-pressure steam, or install a reboiler for stripping kerosene.

Each option has its advantage. Shifting the heat surplus to the third pump-around can reduce the duty of the furnace. Heat provided by the furnace is relatively expensive, because the furnace is usually less efficient than a boiler. However, heat shifting from PA2 to PA3 deteriorates the separation, and consequently, extra steam is needed for stripping gas oil. Thus, the choice between the first two options is a matter of a cost−benefit analysis, and it cannot be determined merely on energy savings considerations.

The choice between producing steam versus installing a reboiler depends on the quantity of light components to be stripped. The use of steam is more efficient for stripping a small amount of light components, whereas a reboiler is better for removing a relatively large number of components.[4,9] It is also possible that a combination of these options offers an optimal solution. To find the best design, all options should be carefully evaluated.

When steam is considered free or is priced as it is proposed in this article, without allowing its production to participate in the design procedure, then the installation of reboilers should be analyzed using the demand−supply diagram offered in Figure 6 or 7. In this case, the shifting of heat to PA3 is energy-savings-related, and reboilers needs to be included by using some other external heat source because process heat is no longer available in this case. Thus, the installation of reboilers can only influence the steam consumption, but it is replaced by a similar duty. The choice is, therefore, not driven by energy savings, but by a cost−benefit analysis that depends on the cost of installing the reboilers and their efficiency relative to that of direct steam.

Applicability to Other Crudes

The light and heavy crude represent two extremes in the raw material spectrum. Any other crude can be thought of as a mixture of the two crudes. Based on the above information, we can design an optimal HEN that allows several crudes to be processed at optimal conditions. The conjecture is that building a network that addresses the extremes also allows for the processing

of a crude of intermediate density at maximum energy efficiency. This possibility is explored in more detail in Part II.

Conclusion

In this paper, a rigorous targeting design procedure has been proposed for the design of conventional crude distillation units. This procedure is an improvement over the existing procedures for several reasons. First, this procedure aims at finding the best scheme for a multipurpose crude distillation unit that processes a variety of crudes. Second, the procedure is more straightforward. Heat demand−supply diagrams, instead of grand composite curves are used as a guide directing the search for optimal schemes. An advantage of heat demand−supply diagrams is that the role of each stream, heater, or cooler in the total energy consumption is clearly shown, so the search for the best scheme is straightforward. Third, the approach is rigorous. The trade-off between different operating parameters is considered, and the decision is based on quantitative calculations instead of simple assumptions. The second paper in this series concentrates on the design of heat exchange network.

Nomenclature

CR = (hot) crude oil
E = energy consumption defined by eq 5, MW
F = mass flow rate, kg/s
F_{pi} = mass flow rate of product i, kg/s
F_{si} = mass flow rate of steam i, kg/s
H_i^s = enthalpy of stripping steam i, MW
h_{FZ}^W = enthalpy of water (steam) at the flash zone, kJ/kg
h_{FZ}^O = enthalpy of hydrocarbon vapor at the flash zone, kJ/kg
$h_{L_{j-1}}$ = enthalpy of liquid falling from tray $j-1$, kJ/kg
h_{L_O} = enthalpy of liquid falling into the flash zone, kJ/kg
h_{pi} = enthalpy of product i, kJ/kg
h_{si} = enthalpy of steam i, kJ/kg
$h_{V_j}^W$ = enthalpy of water (steam) rising from tray j, kJ/kg
$h_{V_j}^O$ = enthalpy of hydrocarbon vapor rising from tray j, kJ/kg
L_O = overflash rate, kg/s
Q_k = duty of pump-around circuit k
R = reflux ratio
R_{min} = minimum reflux ratio
RES = residue
S = steam
SD = diesel stripping steam
SG = gas oil stripping steam
SK = kerosene stripping steam
SR = residue stripping steam
V_j^W = water (steam) flow rate at tray j
V_{FZ} = vapor flow rate at flash zone
V_{FZ}^W = water (steam) flow rate at flash zone
V_{FZ}^O = hydrocarbon vapor flow rate at flash zone
V_j = vapor flow rate at tray j
V_j^O = hydrocarbon vapor flow rate at tray j
U = minimum heating utility excluding steam, MW

Literature Cited

(1) Miller, W.; Osborne, H. G. History and Development of Some Important Phases of Petroleum Refining in the United States. In *The Science of Petroleum*; Oxford University Press: London, 1938; Vol. 2.

(2) Watkins, R. N. *Petroleum Refinery Distillation*; Gulf Publishing Company: Houston, TX, 1979.

(3) Brugma, A. J., The Brugma Process. *Refin. Nat. Gasoline Manuf.* **1941**, *20* (9), 86.

(4) Nelson, W. L. *Petroleum Refinery Engineering*, 4th ed.; McGraw-Hill: New York, 1958.

(5) Bagajewicz, M. On the Design Flexibility of Crude Atmospheric Plants. *Chem. Eng. Commun.* **1998**, *166*, 111.

(6) Agrawal, R. Synthesis of Distillation Column Configurations for a Multicomponent Separation. *Ind. Eng. Chem. Res.* **1996**, *35*, 1059.

(7) Packie, J. W. Distillation Equipment in the Oil Refining Industry. *AIChE Trans.* **1941**, *37*, 51.

(8) Liebmann, K.; Dhole, V. R. Integrated Crude Distillation Design. *Comput. Chem. Eng.* **1995**, *19*, S119.

(9) Liebmann, K.; Dhole, V. R.; Jobson, M. Integration Design Of A Conventional Crude Oil Distillation Tower Using Pinch Analysis. *Inst. Chem. Eng.* **1998**, *76* (3), Part A, 335.

(10) Sharma, R.; Jindal, A.; Mandawala, D.; Jana, S. K. Design/Retrofit Targets of Pump-around Refluxes for Better Energy Integration of a Crude Distillation Column. *Ind. Eng. Chem. Res.* **1999**, *38*, 2411.

(11) Bagajewicz, M.; Ji, S.; Soto, J. A Step-By-Step Targeting Procedure for The Design of Conventional Crude Distillation. Enpromer 99, Florianopolis, Brazil, September 1999.

(12) Hohmann, E. C. Optimum Networks for Heat Exchangers. Ph.D. Thesis, University of Southern California, Los Angeles, CA, 1971.

(13) Huang, F.; Elshout, R. Optimizing the Heat Recovery of Crude Units. *Chem. Eng. Prog.* **1976**, *72* (7), 68.

(14) Naka, Y.; Terashita, M.; Hayashiguchi S.; Takamatsu T. An Intermediate Heating and Cooling Method for a Distillation Column. *J. Chem. Eng. Jpn.* **1980**, *13* (2), 123.

(15) Andrecovich, M.; Westerberg, A. A Simple Synthesis Method Based on Utility Bounding for Heat-integrated Distillation Sequences. *AIChE J.* **1985**, *31* (3), 363.

(16) Terranova, B.; Westerberg, A. Temperature−Heat Diagrams for Complex Columns. 1. Intercooled/Interheated Distillation Columns. *Ind. Eng. Chem. Res.* **1989**, *28*, 1374.

(17) Dhole, V. R.; Linnhoff, B. Distillation Column targets. *Comput. Chem. Eng.* **1993**, *17* (5/6), 549.

(18) Ji, S.; Bagajewicz, M. Rigorous Targeting Procedure For The Design Of Crude Fractionation Units With Pre-Flashing. Proceedings of Escape 10. Florence, Italy, 2000.

Received for review March 7, 2000
Accepted October 3, 2000

IE000302+